Research activities: Integration of renewable resources

Mark O'Malley

Director: Electricity Research Centre

http://ee.ucd.ie/erc

National Renewable Energy Laboratory, Colorado

EPRI Workshop, Dec 9th 2008

electricity research centre

ERC Industry Members

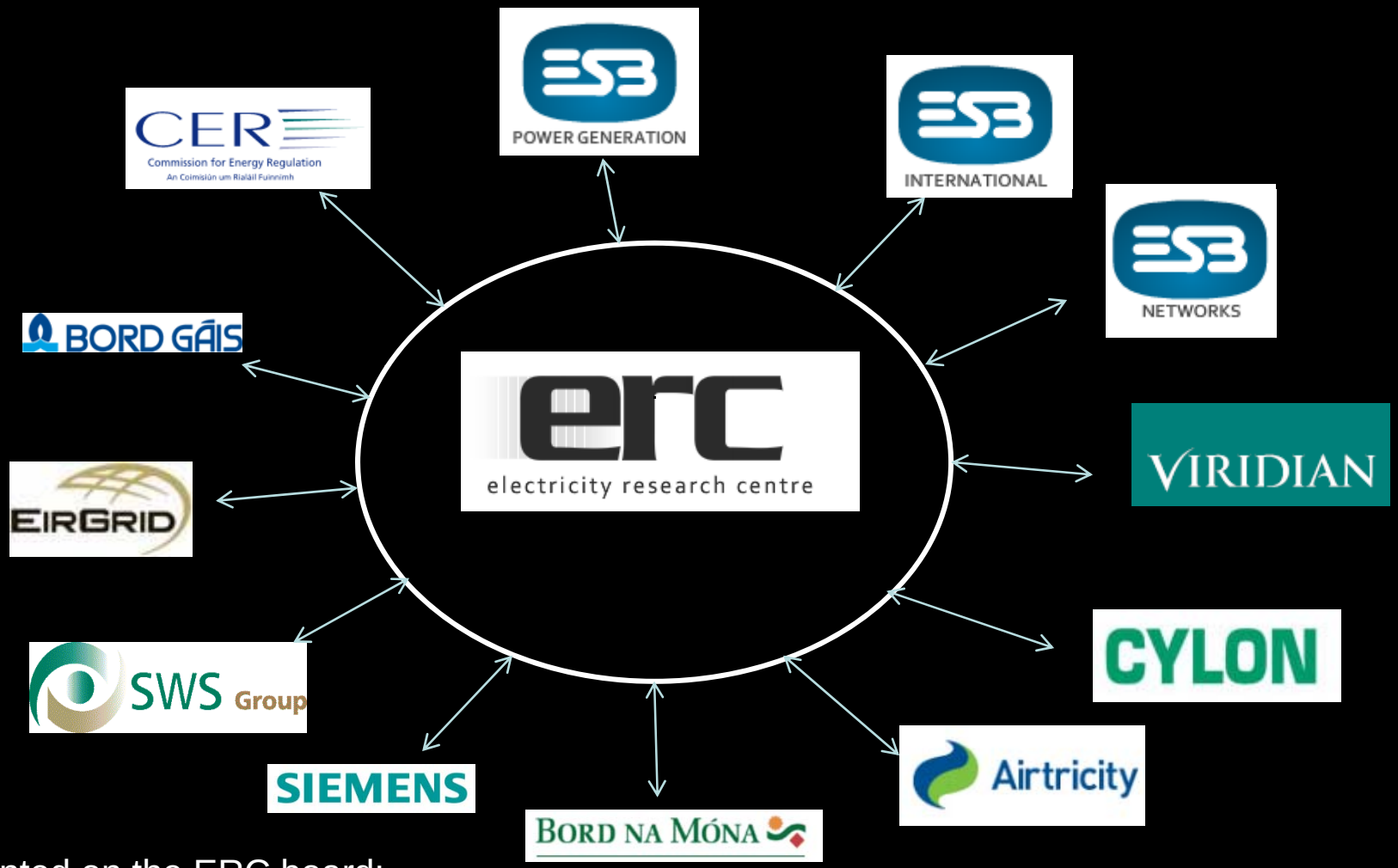

Also represented on the ERC board:

sei SUSTAINABLE ENERGY IRELAND

ESRI

Department of Communications, Energy and Natural Resources

Mission

- Research in Electricity
  - Infrastructure
  - Environmental
  - Market

→ Grid integration of renewables

- Build human capacity

erc
electricity research centre

Research Question

With large quantities of distributed generation (renewable energy) how do we use the existing networks in an optimal manner ?

Maximizing network as energy harvesting device

38kV 7 Bus Test System

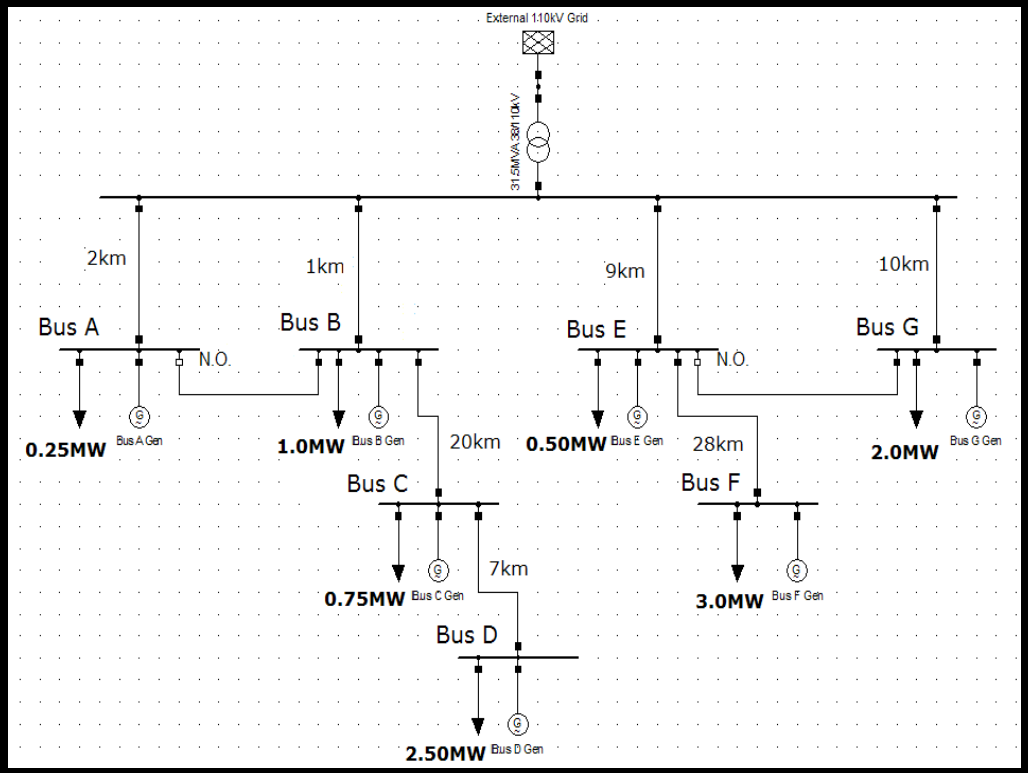

Constrained optimization problem

$$Max\left(\sum_{j=1}^{N}[P_{DGi}(1-\eta_{ji})-P_{LDi}(1-\rho_{ji})]\right)$$

$$subject\ to$$

$$V_i \le V_{\max i}$$

$$\frac{P_{Geni}}{SCL_i.Cos(\phi)}\times 100 \le 10\%$$

$$P_{Installed\,i} \le P_{DGi} \le P_{Avail\,i}$$

$$etc.$$

$$i\ \forall\ N.$$

Keane, A and M.J. O'Malley, "Optimal Allocation of Embedded Generation on Distribution Networks", *IEEE Transactions on Power Systems*", Vol. 20, pp. 1640 - 1646, 2005.

Maximizing network as energy harvesting device

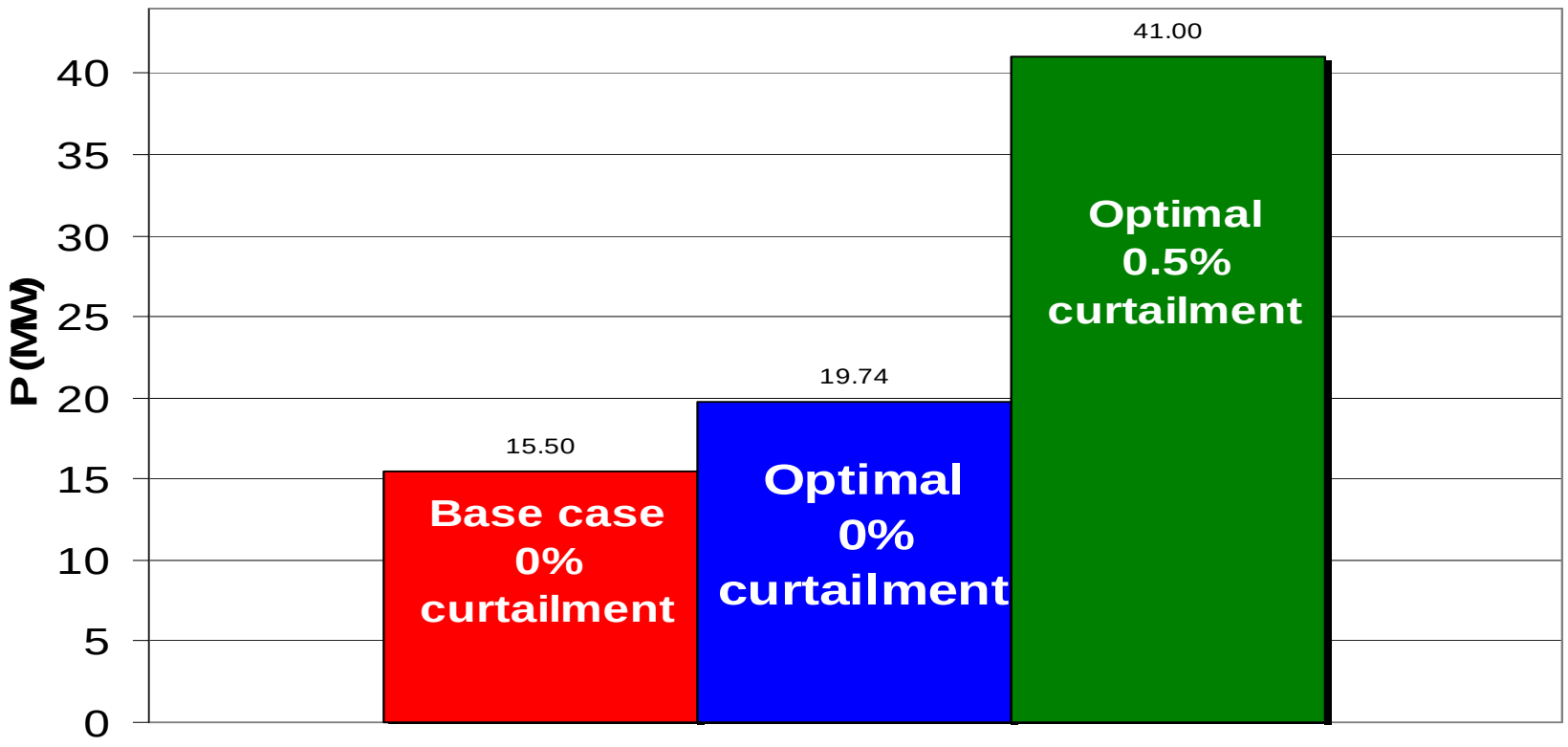

Keane, A and M.J. O'Malley, "Optimal Allocation of Embedded Generation on Distribution Networks", *IEEE Transactions on Power Systems*", Vol. 20, pp. 1640 - 1646, 2005.

Keane, A. and M. J. O'Malley, "Optimal utilisation of distribution networks as energy harvesting devices", *IEEE Transactions on Power Systems*", Vol. 22, pp. 467 – 475, 2007.

Impact of Wind Turbine Control Strategies on Voltage Performance

Eknath Vittal

9 December 2008

Introduction

- Impact of control strategy of the DFIG
  - Terminal voltage control vs. fixed power factor
- Generated voltage probability density functions
  - Rural bus vs. urban bus
- Impact of interconnection
  - Distribution level vs. transmission level

Results – Distribution Level Control

- What would happen if distribution connected farms implemented terminal voltage control?
  - Applied terminal control to next highest kV bus interconnected to farm
  - Observed total Q production and V from the distribution connected farms

Results – Distribution Level Control

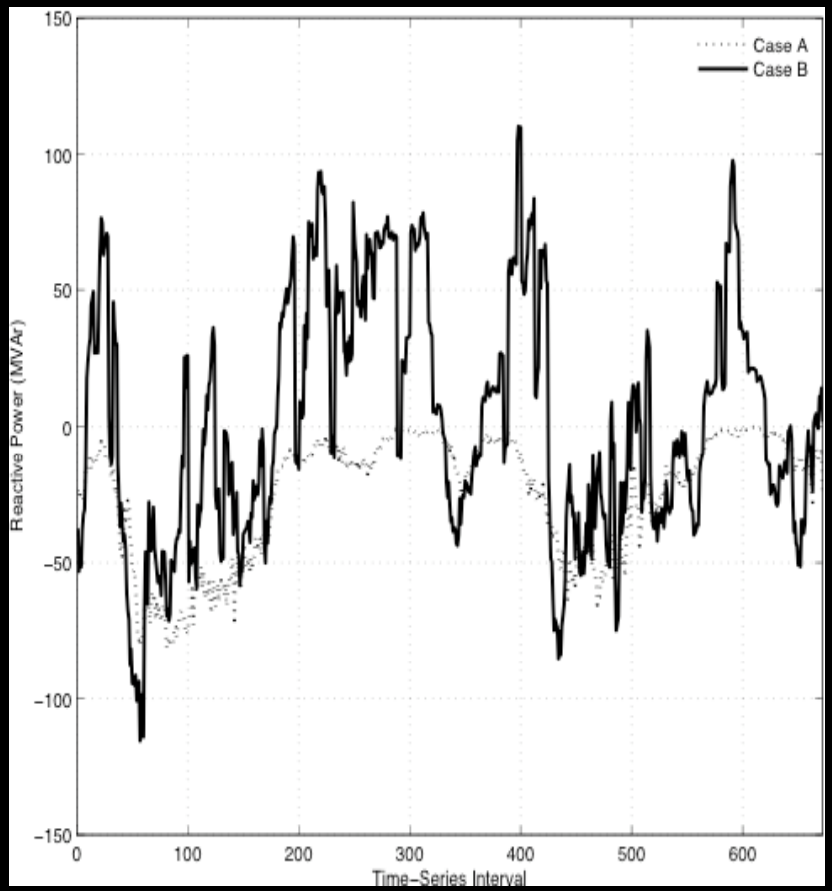

- Simulations on SNV
- Case A no capability to provide positive Q
- Average Q:
  - Case A – (-25 MVAr)
  - Case B – 1.68 MVAr

Results – Distribution Level Control

- Change of 26.68 MVAr allows for:
  - Higher voltage
  - Target V achieved
- Significant since higher V at distributed level improves performance at transmission level

	Average Voltage (pu)		
Bus (kV)	Case A	Case B	Improvement
A (20 kV)	1.0143	1.0027	0.0127
B (20 kV)	1.0132	1.0267	0.0135
C (20 kV)	1.0114	1.0100	1.01 target
D (20 kV)	0.9793	1.0000	0.0207
E (20 kV)	1.0048	1.0090	0.0042
F (6.6 kV)	1.0269	1.0328	0.0059
G (20 kV)	1.0092	1.0090	1.009 target
H (20 kV)	1.0035	1.0090	0.0055

Conclusion

- Research driven by large amounts of wind
- Demonstration on active control of voltage on distribution network